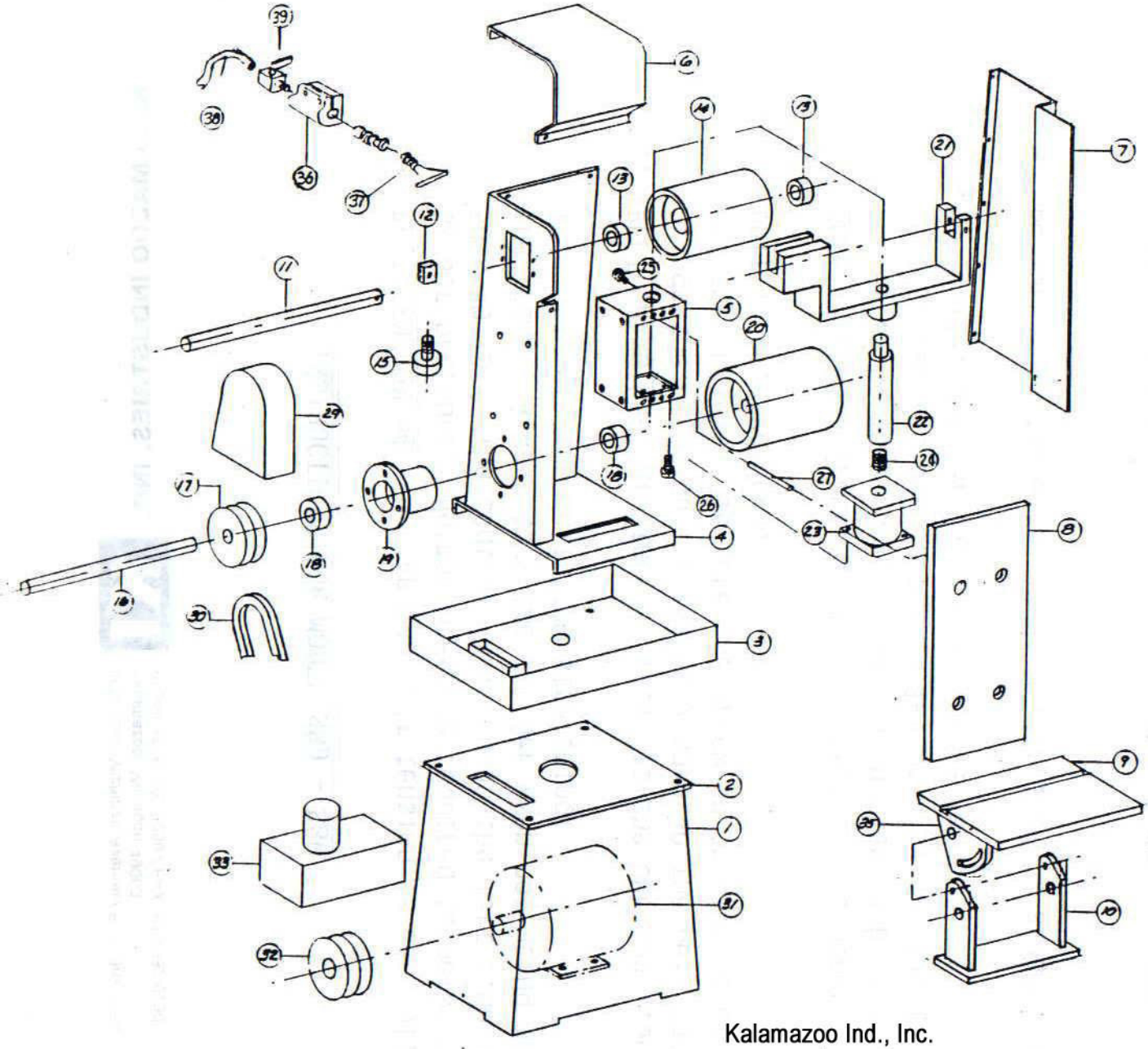

S8D-S8W Parts List			
No.	Part No.	Description	QTY
1	716-003	Sand	1
2	556-024	Base Plate	1
3	576-002	Pan (wet moel only)	1
4	291-008	Main Frame	1
5	291-025	Frame Platen Support	1
6	342-033	Top Guard	1
7	147-002	Door Guard	1
8	563-004	Platen	1
9	829-015	Work Table	1
10	711-009	Table Support	1
11	701-023	Idler Spindle	1
12	053-009	Tracking Block	2
13	044-001	Bearings	2
14	560-024	Idler Pulley	1
15	441-016ASSY	Tracking Knob	1
16	701-022	Drive Spindle	1
17	560-060	Spindle Pulley	1
	049-005	Spindle Pulley Bushing (not shown)	1
18	044-014	Bearings	2
19	386-016	Bearing Housing	1
20	560-023	Drive Pulley	1
21	960-007	Idler Yoke	1
22	575-012	Yoke Post	1
23	131-010	Tension Cylinder	1
24	709-010A	3/8-24 Stud	1
25		5/16-18x2 H.H.S	4
26		5/16-20x2 H.H.S	4
27	645-022	Push Rod	1
28			
29	342-070	Belt Guard	1
30	051-011	V-Belt	2
31	486-032	7.5 Motor	1
32	560-060	Motor Pulley	1
	049-006	Motor Pulley Bushing (Not Shown)	1
33	7-10-CB	Pump & Tank (Wet Model Only)	1
34		8 x 60	1
35	831-017	Table Trunnion	2
36	041-030	Bracket Clamp (Wet Model Only)	1
37	389-004	Flexible Coolant Hose (Wet Model Only)	1
38	389-005	Supply Hose (Wet Model Only)	1
39	131-035	Valve	1
	912-006	Air Gage & Regulator (Not Shown)	1
	912-014	Four Way Valve (Not Shown)	1

Kalamazoo Ind., Inc.
6856 East K Ave.
Kalamazoo, Mi. 49048
PH: 269-382-2050, FX:269-382-0790
www.kalamazooindustries.com